PUBLISHED: 15-AUG-2016
2017.0 DISCOVERY (LR), 308-07

FOUR-WHEEL DRIVE SYSTEMS

# TRANSFER CASE SHIFT MOTOR (G2003337)

REMOVAL AND INSTALLATION

| | | | | |
|---|---|---|---|---|
| 41.30.03 | MOTOR - RATIO CONTROL - RENEW | ALL DERIVATIVES | 0.5 | USED WITHINS |

## REMOVAL

**NOTE:**

- Some variation in the illustrations may occur, but the essential information is always correct.
- Some components shown removed for clarity.

transmissionmanuals

1. Disconnect the battery ground cable.
   Refer to: Specifications (414-00, Specifications).

2. **WARNING:**

   Make sure to support the vehicle with axle stands.

   Raise and support the vehicle.

3.

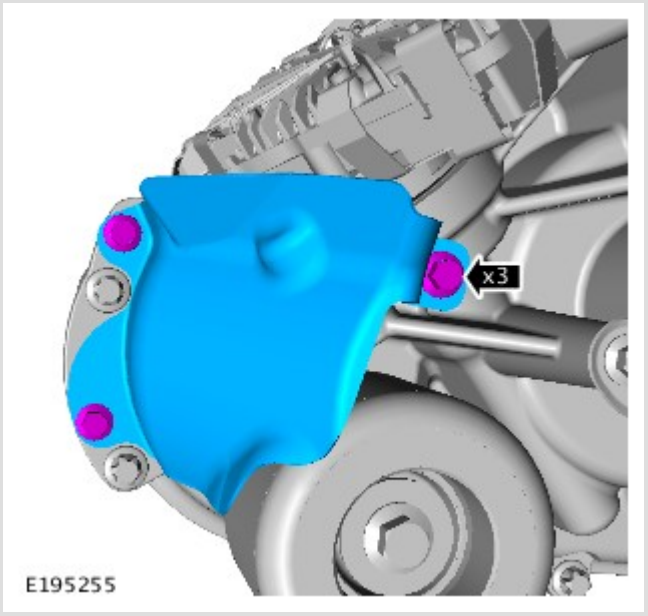


Remove the heat shield if installed.

4.

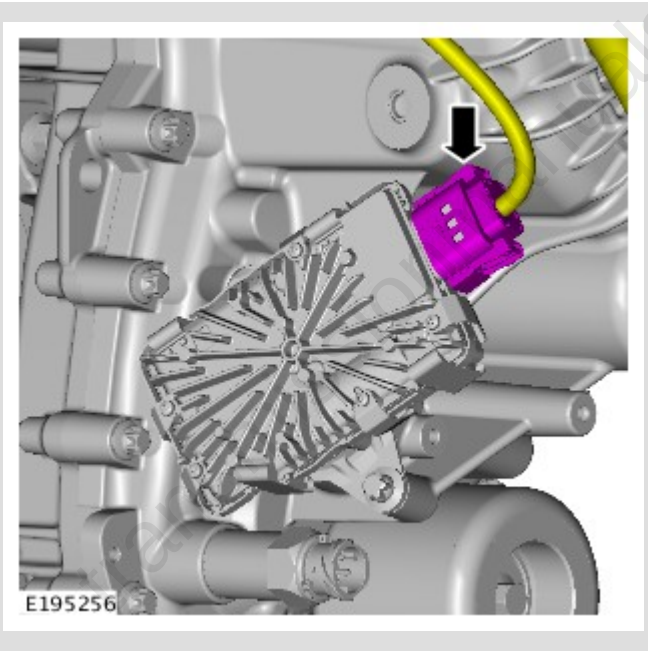


Disconnect the electrical connector.

5.

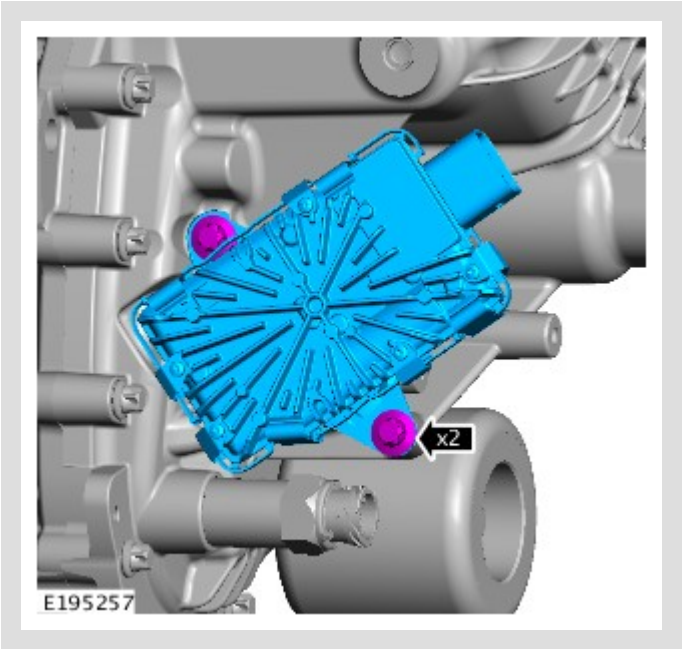


Remove the transfer case shift motor.

## INSTALLATION

1.

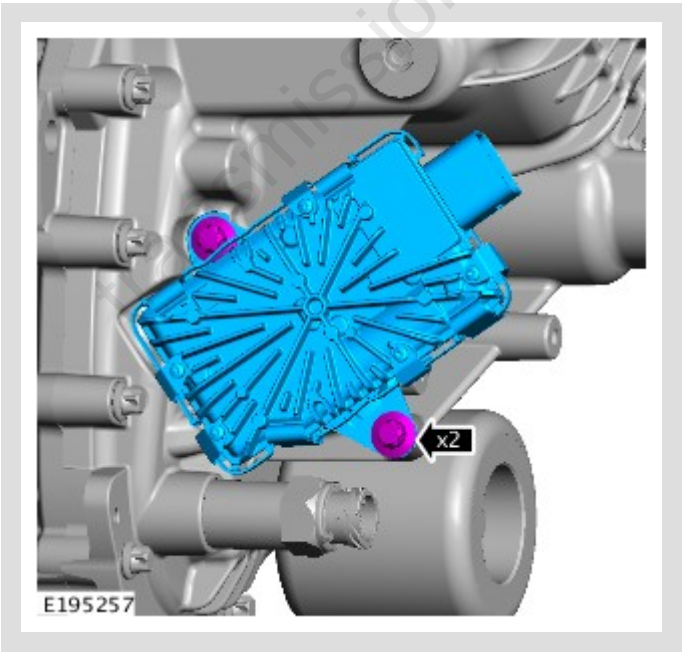


- Install the transfer case shift motor.
- *Torque:* **35 Nm**

transmissionmanuals.com

2.

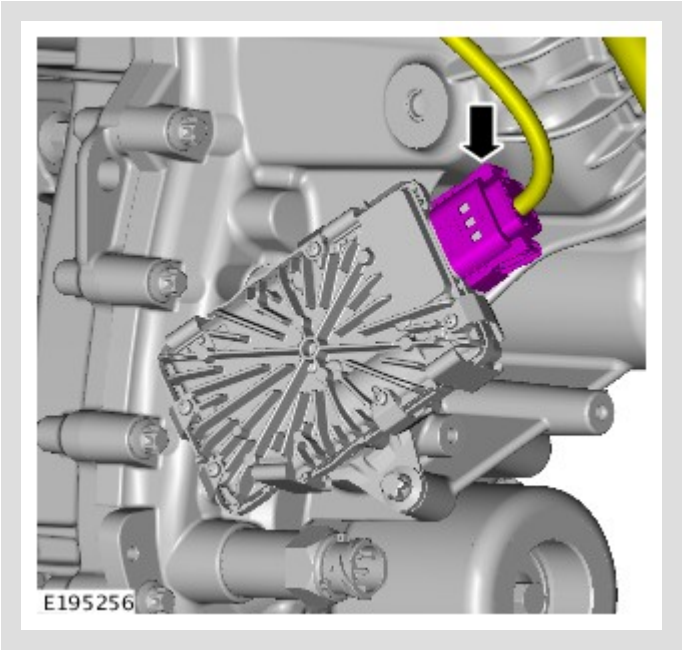


Connect the electrical connector.

3.

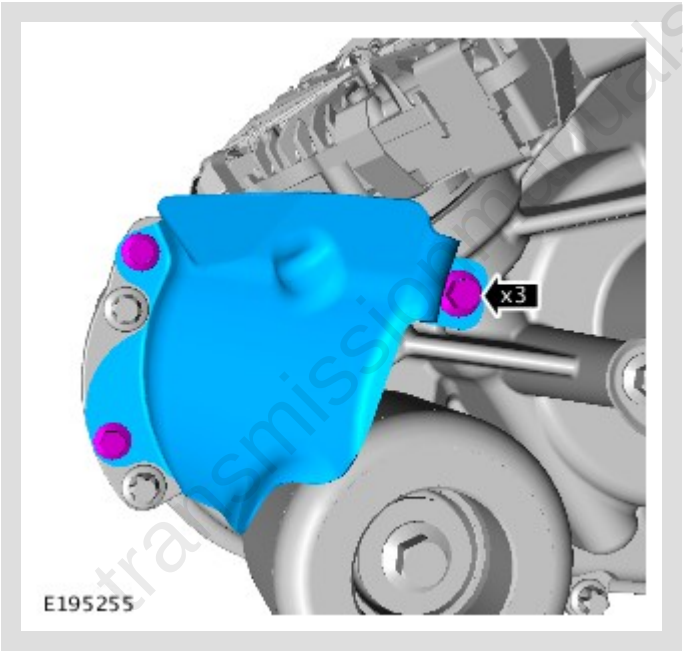


- Install the heat shield if previously removed.
- *Torque:* **8 Nm**

4.

**WARNING:**

Make sure to support the vehicle with axle stands.

Raise and support the vehicle.

transmissionmanuals.com

5. Connect the battery ground cable.
Refer to: Specifications (414-00, Specifications).

6.

- Connect the Land Rover approved diagnostic equipment.
- Start the diagnostic service function "transfer case-transfer case control module replacement".
- Clear any Diagnostic Trouble Codes (DTCs) after calibration and check for correct operation.

transmissionmanuals.com